Reference Manual
00809-0500-4975, Rev AA
June 2025

Rosemount™ FS-975

Flame Simulators

ROSEMOUNT™

EMERSON™

Safety information

⚠ WARNING

If the product is not used and maintained in accordance with the manufacturer's instructions, the product may not perform as intended.

All individuals who have or will have responsibility for using, maintaining, or servicing this product must read this manual thoroughly.

⚠ WARNING

Physical access

Unauthorized personnel may potentially cause significant damage to and/or misconfiguration of end users' equipment. This could be intentional or unintentional and needs to be protected against.

Physical security is an important part of any security program and fundamental to protecting your system. Restrict physical access by unauthorized personnel to protect end users' assets. This is true for all systems used within the facility.

NOTICE

The device is not field-repairable due to the meticulous alignment and calibration of the sensors and the respective circuits.
Do not attempt to modify or repair the internal circuits or change their settings, as this will impair the system's performance and void the Emerson product warranty.

Legal notice

The device described in this document is the property of Emerson.

No part of the hardware, software, or documentation may be reproduced, transmitted, transcribed, stored in a retrieval system, or translated into any language or computer language, in any form or by any means, without prior written permission from Emerson.

While great efforts have been made to ensure the accuracy and clarity of this document, Emerson assumes no liability resulting from any omissions in this document or from misuse of the information obtained herein. The information in this document has been carefully checked and is believed to be entirely reliable with all of the necessary information included. Emerson reserves the right to make changes to any products described herein to improve reliability, function, or design and reserves the right to revise this document and make changes from time to time in content hereof with no obligation to notify any persons of revisions or changes. Emerson does not assume any liability arising out of the application or any use of any product or circuit described herein; neither does it convey license under its patent rights or the rights of others.

Warranty

1. **Limited Warranty** – Subject to the limitations contained in Section 2 (Limitation of Remedy and Liability) herein, Seller warrants that (a) the licensed firmware embodied in the Goods will execute the programming instructions provided by Seller; (b) that the Goods manufactured by Seller will be free from defects in materials or workmanship under normal use and care; and (c) Services will be performed by trained personnel using proper equipment and instrumentation for the particular Service provided. The foregoing warranties will apply until the expiration of the applicable warranty period. The flame simulator is warranted against defective parts and workmanship for 24 months from the date of purchase, the battery for 12 months, and the charger for 6 months. Products purchased by Seller from a third party for resale to Buyer (**Resale Products**) shall carry only the warranty extended by the original manufacturer. Buyer agrees that Seller has no liability for Resale Products beyond making a reasonable commercial effort to arrange for procurement and shipping of the Resale Products. If Buyer discovers any warranty defects and notifies Seller thereof in writing during the applicable warranty period, Seller shall, at its option, (i) correct any errors that are found by Seller in the firmware or Services; (ii) repair or replace FOB point of manufacture that portion of the Goods found by Seller to be defective; or (iii) refund the purchase price of the defective portion of the Goods/Services. All replacements or repairs necessitated by inadequate maintenance; normal wear and usage; unsuitable power sources or environmental conditions; accident; misuse; improper installation; modification; repair; use of unauthorized replacement parts; storage or handling; or any other cause not the fault of Seller, are not covered by this limited warranty and shall be replaced or repaired at Buyer's sole expense and Seller shall not be obligated to pay any costs or charges incurred by Buyer or any other party except as may be agreed upon in writing in advance by Seller. All costs of dismantling, re-installation, freight and the time and expenses of Seller's personnel and representatives for site travel and diagnosis under this limited warranty clause shall be borne by Buyer unless accepted in writing by Seller. Goods repaired and parts replaced by Seller during the warranty period shall be in warranty for the remainder of the original warranty period or 90 days, whichever is longer. This limited warranty is the only warranty made by Seller and can be amended only in a writing signed by an authorized representative of Seller. The limited warranty herein ceases to be effective if Buyer fails to operate and use the Goods sold hereunder in a safe and reasonable manner and in accordance with any written instructions from the manufacturers. The warranties and remedies set forth above are exclusive. there are no representations or warranties of any kind, expressed or implied, as to merchantability, fitness for particular purpose, or any other matter with respect to any of the goods or services.

2. **Limitation of Remedy and Liability** – Seller shall not be liable for damages caused by delay in performance. The remedies of buyer set forth in the agreement are exclusive. In no event, regardless of the form of the claim or cause of action (whether based in contract, infringement, negligence, strict liability, other tort, or otherwise), shall seller's liability to buyer and/or buyer's customers exceed the price to buyer of the specific goods manufactured or services provided by seller giving rise to the claim or cause of action. Buyer agrees that in no event shall seller's liability to buyer and/or buyer's customers extend to include incidental, consequential, or punitive damages. The term "consequential damages" shall include, but not be limited to, loss of anticipated profits, revenue, or use and costs incurred including without limitation for capital, fuel and power, and claims of buyer's customers.

Contents

Chapter 1 Introduction 7
1.1 Flame simulator compatibility with flame detector models 7
1.2 Features and benefits 7
1.3 Principles of operation 7
1.4 Structure 8

Chapter 2 Operation 11
2.1 Unpacking 11
2.2 Operate 11
2.3 Simulator status 12
2.4 Charge the battery 12
2.5 Replace the battery 13

Chapter 3 Troubleshoot 15
3.1 LED flashes three times in three consecutive cycles 15
3.2 LED flashes three times in five consecutive cycles 15
3.3 LED does not turn ON 15
3.4 Flame simulator seems to work properly but does not activate the flame detector 15

Chapter 4 Maintenance 17

Chapter 5 Ordering information 19

Chapter 6 Technical specifications 21
6.1 Detection ranges per detector/flame simulator 21
6.2 General specifications 22
6.3 Electrical specifications 22
6.4 Physical specifications 22
6.5 RoHS directive 23
6.6 Electromagnetic interference (EMI) compatibility 23

Chapter 7 Product certifications 25
7.1 ATEX and IECEx 25
7.2 CSA C/US 25
7.3 TR CU 25
7.4 INMETRO 25
7.5 Certification instructions 26
7.6 Specific conditions of use 27

1 Introduction

To comply with local standards and jurisdictional authorities, perform end-to-end loop testing of fire protection alarm systems, including detectors, periodically. Many safety authorities and plant managers of high value/high risk assets and facilities insist on quarterly end-to-end testing of their entire fire protection systems using an external flame simulator.

Rosemount Flame Simulators emit electromagnetic radiation in a unique sequential pattern corresponding to and recognizable as fire by the specific Rosemount Flame Detector. This allows the detector to be tested under real fire conditions without the associated risk of an open flame.

Rosemount Flame Simulators are ATEX-certified EExd for use in Zone 1 and Zone 2 hazardous areas and are powered by rechargeable lithium-ion batteries. When fully charged, the Flame Simulator will operate for at least 100 tests without recharging.

The Rosemount Flame Simulator is the only non-hazardous and safe method to test the flame detector's sensors, internal electronics, alarm activation software, cleanliness of the viewing window/lens, wiring integrity, actual relay activation, and proper functionality of any other outputs used (mA, RS-485, or HART®).

1.1 Flame simulator compatibility with flame detector models

The Rosemount Flame Simulators are compatible with the following:

Table 1-1: Flame Simulator Compatibility

Part number	Compatible with
FS-IR-975	Rosemount 975MR Rosemount 965
FS-UVIR-975	Rosemount 975UR Rosemount 975UF
FS-HR-975	Rosemount 975HR

1.2 Features and benefits

- Used for maintenance and testing of flame detectors
- Includes rechargeable battery
- Operates at least 100 tests before the battery must be recharged

1.3 Principles of operation

The simulator includes a reflector which accumulates the infrared energy and directs it towards the detector. The Rosemount Flame Simulator also includes a sight to point the simulator to the center of the flame detector.

1.4 Structure

This device is built from black-coated aluminum housing. It includes:

- Reflector
- Electronic compartment
- Battery compartment
- Hand grip

The electronic compartment includes a PC board with an infrared (IR) or halogen lamp, which is assembled on the PC board and emits light through a sapphire window.

The battery compartment includes a battery pack containing four lithium-ion batteries of total 14.8 Vdc and 2.6 Ah.

Figure 1-1: Flame Simulator Side View

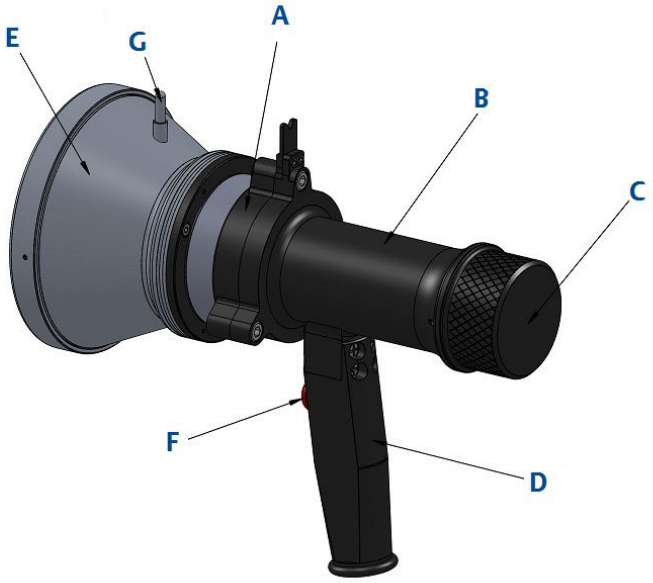

A. Electronic compartment
B. Battery compartment
C. Battery compartment cover
D. Hand grip
E. Reflector
F. Push button
G. Sight

Figure 1-2: Flame Simulator Rear View

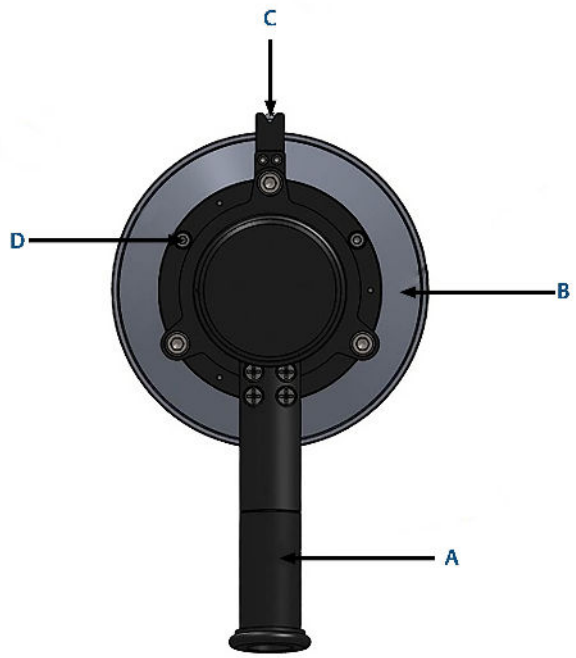

A. Hand grip
B. Reflector
C. Sight
D. Back cover locking screw

Figure 1-3: Flame Simulator Front View

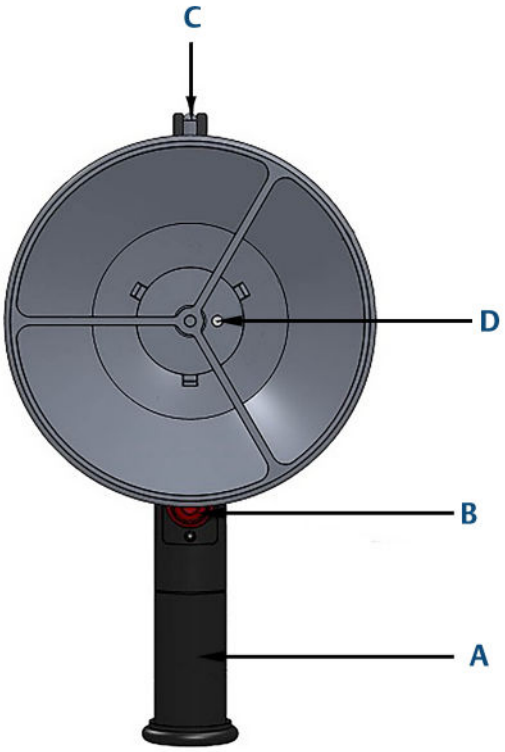

A. Hand grip
B. Push button
C. Sight
D. Laser diode

2 Operation

2.1 Unpacking

Upon receipt of your device, verify the appropriate purchase order.

NOTICE

Store the device in a suitable container to prevent possible damage during handling.

2.2 Operate

Prerequisites

⚠ WARNING

Hazardous areas

Do not open this device for any reason in a hazardous area.

⚠ WARNING

Explosion

Do not open when an explosive atmosphere is present.
Only use replaceable Rosemount battery pack, Part Number (PN) 380004.

NOTICE

Disconnect external devices, such as fire alarms and automatic extinguishing systems, before performing maintenance.

Procedure

1. Verify that you are using the correct simulator that fits the tested detector per Table 1-1.
2. Verify that you are at the correct distance from the detector according to the type of detector and the detector sensitivity.

   See Detection ranges per detector/flame simulator.
3. Aim the flame simulator using the mechanical sight at the center of the detector. Push the **Activate** button and then use the halogen beam for fine adjustment towards the center of the detector.

Once the trigger is pressed, with an initial two second delay, the equipment will operate for a maximum of 60 seconds, following which the equipment cannot be operated for a minimum period of 30 seconds.

2.3 Simulator status

For the first five seconds, the laser defines the simulator status.

Normal status

When switching to normal status, the equipment will operate for a maximum period of 60 seconds, following which the equipment cannot be operated for a minimum period of 30 seconds.

Fault status

When the battery is lower than 12.3 Vdc, the lamp won't be activated.

2.4 Charge the battery

This device uses lithium-ion batteries as a rechargeable power source. When the batteries are fully charged, under normal conditions (room temperature), the device operates at least 100 times without restarting. When the voltage from the batteries is lower than the required operational level, the device will not operate.

To charge the battery:

Procedure

1. Place the device on a table in a safe area not exceeding 104 °F (40 °C).
2. Release the locking screw.
   See Figure 1-2.
3. Unscrew the battery compartment cover counterclockwise.
   See Figure 1-1.
4. Unscrew the locking disc clockwise using a 1.5 mm hex key.
   See Figure 2-1.
5. Pull out the battery from the flame simulator.

   ⚠ WARNING

   The battery must be charged only after being removed from the flame simulator.

6. Connect the battery to the charger. Verify that the charger is the one supplied with the flame simulator.
7. Let the battery charge for a maximum of two to three hours.
8. Disconnect the charger.
9. Insert the battery into the flame simulator.
   The LED will flash twice to indicate that the battery is fully charged.
10. Screw in the locking disc using a 1.5 mm hex key.
    See Figure 2-1.
11. Screw in the battery compartment cover.
    See Figure 1-1.
12. Lock the back cover with the locking screw.
    See Figure 1-2.

2.5 Replace the battery

Figure 2-1: Flame Simulator Battery Replacement

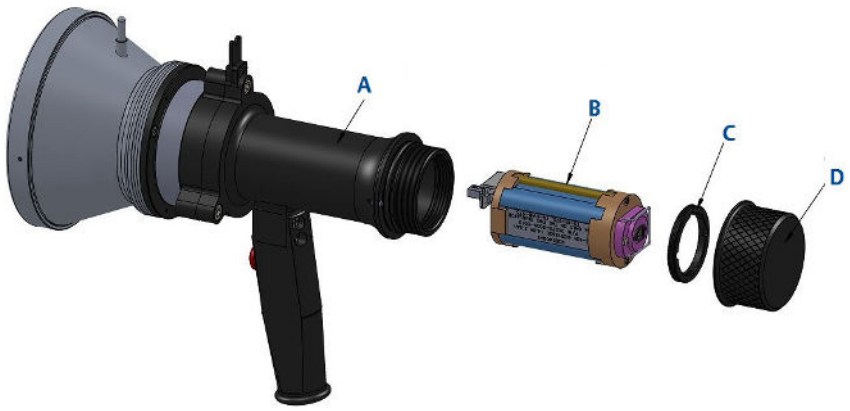

A. Simulator
B. Battery pack
C. Locking disc
D. Back cover

Procedure

1. To remove the battery, follow Step 1 through Step 5 in Charge the battery.
2. Insert the new battery pack into the simulator housing.
   Use only Rosemount battery pack, PN 380004.
3. Follow Step 9 through Step 12 in Charge the battery.

3 Troubleshoot

3.1 LED flashes three times in three consecutive cycles

Recommended action

Recharge the battery.

3.2 LED flashes three times in five consecutive cycles

Recommended actions

1. Disconnect and reconnect the battery.
2. Operate the flame simulator again.

3.3 LED does not turn ON

Recommended actions

1. Recharge the battery.
2. Replace the battery.

3.4 Flame simulator seems to work properly but does not activate the flame detector

Recommended actions

1. Verify that you are aiming the flame simulator beam at the center of the flame detector.
2. Verify that you are at the correct distance.
3. Verify that the flame detector is at the correct sensitivity.
4. Verify that the flame detector is operating.
5. Verify that the flame detector is clean.

4 Maintenance

⚠ WARNING

Explosion

Do not open when an explosive atmosphere is present.
Only use replaceable Rosemount battery pack, Part Number (PN) 380004.

- Ensure the flame simulator is charged before operation.
- Ensure the reflector and the window are clean.
- Before replacing the battery, ensure that you have a Rosemount battery pack, PN 380004.
- When the simulator is not in use, remove the battery pack and recharge every six months.
- The typical lithium-ion battery lifetime is two to three years under normal conditions.
- The battery shelf life is five years under normal storage conditions.

5 Ordering information

Model

Code	Description
FS	Triple IR (IR3)
-IR-975	Multi-spectrum infrared (975MR, 965 units)
-UV/IR-975	Ultraviolet infrared (975UF and 975UR units)
-HR-975	Multi-spectrum infrared hydrogen (975HR units)

Product certifications

Code	Description
A2	USA and Canada Explosion-Proof
KZ	Technical Regulations Customs Union (EAC) Kazakhstan Flameproof
EM	Technical Regulations Customs Union (TRCU)/EAC Flameproof

Accessories

Part number	Description
380004	Rosemount Flame Simulator Spare Battery Kit
380151	16.8 V Lithium-ion charger

6 Technical specifications

6.1 Detection ranges per detector/flame simulator

Table 6-1: Detection Ranges per Detector/Flame Simulator

Model	Detector types	Detector sensitivity settings	Testing distance
FS-IR-975	975MR	50 ft. (15 m)	5 ft. (1.5 m)
		100 ft. (30 m)	13 ft. (4 m)
		150 ft. (45 m)	20 ft. (6 m)
		215 ft. (65 m)	30 ft. (9 m)
		300 ft. (90 m)	36 ft. (11 m)
	975MR (Legacy)	50 ft. (15 m)	6.6 ft. (2 m)
		100 ft. (30 m)	19.6 ft. (6 m)
		150 ft. (45 m)	29.5 ft. (9 m)
		215 ft. (65 m)	39.3 ft. (12 m)
	965	9.8 ft. (3 m)	4.9 ft. (1.5 m)
		32.8 ft. (10 m)	9.8 ft. (3 m)
		65.6 ft. (20 m)	13.1 ft. (4 m)
		98.4 ft. (30 m)	26.2 ft. (8 m)
		147.6 ft. (45 m)	45.9 ft. (14 m)
FS-UVIR-975	975UR	93 ft. (28 m)	8 ft. (2.5 m)
	975UF	10 ft. (3 m)	3 ft. (1 m)
		50 ft. (15 m)	11 ft. (7 m)
		93 ft. (28 m)	46 ft. (14 m)
	975UR (Legacy)	50 ft. (15 m)	8 ft. (2.5 m)
	975UF (Legacy)	60 ft. (20 m)	23 ft. (7.01 m)
FS-HR-975	975HR (Legacy)	50 ft. (15 m)	6.6 ft. (2 m)
		100 ft. (30 m)	19.6 ft. (6 m)
		150 ft. (45 m)	29.5 ft. (9 m)
		215 ft. (65 m)	39.3 ft. (12 m)
	975HR	50 ft. (15 m)	2 ft. (0.6 m)
		100 ft. (30 m)	6 ft. (2 m)
		150 ft. (45 m)	8 ft. (2.5 m)
		215 ft. (65 m)	16 ft. (5 m)
		300 ft. (90 m)	26 ft. (8 m)

Note

- The minimum distance from the detector is 30 in. (75 cm).
- At extreme temperatures, there is a 15 percent reduction in the testing range.

⚠ WARNING

Keep the device in a safe place when not in use.

6.2 General specifications

Temperature range: –4 °F to +122 °F (–20 °C to +50 °C)

Vibration protection: 1 g (10 to 50 Hz)

6.3 Electrical specifications

- Rechargeable four-cell lithium-ion battery:
  - Power: 14.8 V (4 x 3.7 V), maximum current: 0.2 A
  - Charging: 16.8 V (4 x 4.2 V), maximum current: 2 A
- Battery capacity: 2.6 Ah
- Charging time: Two hours at 2 A
- Samsung: INR18650-35E

6.4 Physical specifications

Dimensions: 9 in. (230 mm) x 7.3 in. (185 mm) x 5.35 in. (136 mm)

Weight: 5.5 lb. (2.5 kg)

Enclosure: aluminum, heavy-duty copper-free, black zinc coating

Explosion-proof enclosure:

FS-IR-975, FS-HR-975	FS-UVIR-975
ATEX, IECEx Ex II 2 G D Ex db ib op is IIB + H_2 T4 Gb Ex ib op is tb IIIC T135 °C Db –4 °F to +122 °F (–20 °C to +50 °C) Water and dust-tight: IP65	ATEX, IECEx Ex II 2 G D Ex db ib IIB + H_2 T4 Gb Ex ib tb IIIC T135 °C Db –4 °F to +122 °F (–20 °C to +50 °C) Water and dust-tight IP65

6.5 RoHS directive

This device is compliant with RoHS directive 2011/65/EU, 2015/863.

6.6 Electromagnetic interference (EMI) compatibility

Table 6-2: Immunity Tests

Title	Basic standard	Level to be tested
Electrostatic discharge (ESD)	IEC 61000-4-2	6 kV/8 kV contact/air
Radiated electromagnetic field	IEC 61000-4-3	20 V/m (80 MHz to 1 GHz) 10 V/m (1.4 GHz to 2 GHz) 3 V/m (2.0 GHz to 2.7 GHz)
Conducted disturbances	IEC 61000-4-6	10 Vrms (150 kHz to 80 MHz)
Immunity to main supply voltage variations	MIL-STD-1275B	N/A

Table 6-3: Emission Test

Title	Basic standard	Level to be tested	Class
Radiated emission	IEC 61000-6-3	40 dbuv/m (30 MHz to 230 MHz) 47 dbuv/m (230 MHz to 1 GHz)	Like Class B of EN 55022

7 Product certifications

This device is certified to the following standards:

7.1 ATEX and IECEx

The Rosemount Flame Simulator is approved per Sira 16ATEX1051X and IECEx SIR 16.0023X.

FS-IR-975, FS-HR-975	FS-UVIR-975
Ex II 2 G D Ex db ib op is IIB + H_2 T4 Gb Ex ib op is tb IIIC T135 °C Db –4 °F to +122 °F (–20 °C to +50 °C)	Ex II 2 G D Ex db ib IIB + H_2 T4 Gb Ex ib tb IIIC T135 °C Db –4 °F to +122 °F (–20 °C to +50 °C)
This product is suitable for use in hazardous zones 1, 2, 21, and 22 with IIB + H_2 gas group vapor present.	This product is suitable for use in hazardous zones 1 and 2 with IIB + H_2 gas group vapor present.

7.2 CSA C/US

The Rosemount Flame Simulator is approved to CSA C/US per report No. 80179876:

FS-IR-975, FS-HR-975	FS-UVIR-975
Class I, Division 1, Groups B, C, D T4 Class I, Division 2, Groups B, C, D T4 Ex db ib op is IIB + H_2 T4 Gb Class I, Zone 1, AEx db ib op is IIB + H_2 T4 Gb Ex ec ic op is IIB + H_2 T4 Gc Class I, Zone 2, AEx ec ic op is IIB + H_2 T4 Gc Class II and III, Division 2, Groups F, G T135 °C Ex ib op is tb IIIC T135 °C Db Zone 21, AEx ib op is tb IIIC T135 °C Db	Class I, Division 1, Groups B, C, D T4 Class I, Division 2, Groups B, C, D T4 Ex db ib IIB + H_2 T4 Gb Class I, Zone 1, AEx db ib IIB + H_2 T4 Gb Class II and III, Division 2, Groups F, G T135 °C Ex ib tb IIIC T135 °C Db Zone 21, AEx ib tb IIIC T135 °C Db

7.3 TR CU

The Rosemount Flame Simulator is in compliance with the standard TR CU 012/2011 per:

FS-IR-975, FS-HR-975	FS-UVIR-975
1 Ex db ib op is HB + H_2 T4 Gb X EX ib op is tb IIIC T135 °C Db X	1 Ex db ib HB + H_2 T4 Gb X EX ib tb IIIC T135 °C Db X

7.4 INMETRO

The product complies with INMETRO approval per the following standards:

- ABNT NBR IEC 60079-0
- ABNT NBR IEC 60079-1
- ABNT NBR IEC 60079-11

- ABNT NBR IEC 60079-28
- ABNT NBR IEC 60079-31

Marking:

FS-IR-975, FS-HR-975	FS-UVIR-975
Ex db ib op is IIB + H_2 T4 Gb Ex ib op is tb IIIC T135 °C Db T_a= –20 °C ≤ T_a ≤ +50 °C	Ex db ib IIB + H_2 T4 Gb Ex ib tb IIIC T135 °C Db T_a= –20 °C ≤ T_a ≤ +50 °C

Certificate No. UL-BR 17.0852X (Rosemount) and UL-BR 22.4057X (Spectronix)

7.5 Certification instructions

The marking of the equipment is:

FS-IR-975, FS-HR-975	FS-UVIR-975
Ex II 2 G D Ex db ib op is IIB + H_2 T4 Gb Ex ib op is tb IIIC T135 °C Db T_a = –4 °F to +122 °F (–20 °C to +50 °C)	Ex II 2 G D Ex db ib IIB + H_2 T4 Gb Ex ib tb IIIC T135 °C Db T_a = –4 °F to +122 °F (–20 °C to +50 °C)

The manufacturer/importer/repair site is Emerson at 6021 Innovation Blvd, Shakopee, MN 55379, USA.

The equipment may be used with flammable gases and vapors with apparatus groups IIA and IIB + H_2 T4 in the ambient temperature range of –4 °F to +122 °F (–20 °C to +50 °C).

Inspection and maintenance of this equipment should be carried out by suitable trained personnel, in accordance with the applicable code of practice, e.g., EN 60079-17.

Repair of this equipment should be carried out by suitable trained personnel, in accordance with the applicable code of practice, e.g., EN 60079-19.

The certification of this equipment relies upon the following materials used in its construction:

Enclosure: aluminum 6061T6

Window: sapphire glass

Seals: EPDM

If the equipment is likely to come into contact with aggressive substances (described below), then it is the operator's responsibility to take suitable precautions (described below) to prevent the equipment from being adversely affected, thus ensuring that the type of protection provided by the equipment is not compromised.

Aggressive substances	For example, acidic liquids, gases that may attack metals, or solvents that may affect polymeric materials.
Suitable precautions	For example, regular checks as part of routine inspections or establishing from the material's data sheet that it is resistant to specific chemicals.

7.6 Specific conditions of use

The dimensions of the flameproof joints are other than the relevant minimum or maximum values required by Table 3 of IEC/EN 60079-1:2014 for IIB + H_2, as detailed below.

Table 7-1: Minimum and Maximum Widths

Flamepath description	Type of joint	Minimum width *L*	Maximum gap *ic*
Joint formed by window against the enclosure	Flanged	0.4232 in. (10.75 mm)	0.0008 in. (0.02 mm)
Enclosure end-cap spigot	Cylindrical	0.59 in. (15 mm)	0.0031 in. (0.08 mm)

Gaps must not be machined to be any larger than the values of *ic*, and width must not be modified to be any smaller than the values of *L* shown in Table 7-1.

The equipment must only be charged in a safe area with the batteries removed from the flameproof enclosure. The charge conditions are as follows:

Maximum charge voltage: 16.8 V

Maximum charge current: 2 A

The charge voltage must not exceed these values.

00809-0500-4975
Rev. AA
2025

For more information: **Emerson.com/global**

©2025 Emerson. All rights reserved.

Emerson Terms and Conditions of Sale are available upon request. The Emerson logo is a trademark and service mark of Emerson Electric Co. Rosemount is a mark of one of the Emerson family of companies. All other marks are the property of their respective owners.

ROSEMOUNT™

EMERSON™