FLEXIDOME IP indoor 4000i

The 1080p indoor dome cameras from Bosch are professional surveillance cameras that provide high quality HD images for demanding security and surveillance network requirements. These domes are true day/night cameras offering excellent performance day or night.
There is a version with a built-in active infrared illuminator that provides high performance in extreme low-light environments.

System overview

Easy to install stylish indoor dome
Ideal for indoor use, the stylish design is suitable for installations where appearance and flexible coverage are important. The varifocal lens allows you to choose the coverage area to best suit your application. Using the proprietary pan/tilt/rotation mechanism, installers can select the exact field of view. Mounting options are numerous, including surface, wall, and suspended-ceiling mounting.
The automatic zoom/focus lens wizard makes it easy for an installer to accurately zoom and focus the camera for both day and night operation. The wizard is activated from the PC or from the on-board camera push button making it easy to choose the workflow that suits best.
The AVF (Automatic Varifocal) feature means that the zoom can be changed without opening the camera. The automatic motorized zoom/focus adjustment with 1:1 pixel mapping ensures the camera is always accurately focused.

H.265 PoE

- Easy to install with auto zoom/focus lens, wizard and pre-configured modes
- 1080p30 for highly detailed images
- Fully configurable H.265 multi-streaming
- Built-in Essential Video Analytics to trigger relevant alerts and quickly retrieve data
- IR version with 30 m (98 ft) viewing distance

Functions

Essential Video Analytics
The built-in video analysis reinforces the Intelligence-at-the-Edge concept and now delivers even more powerful features. Essential Video Analytics is ideal for use in controlled environments with limited detection ranges.
The system reliably detects, tracks, and analyzes objects, and alerts you when predefined alarms are triggered. A smart set of alarm rules makes complex tasks easy and reduces false alarms to a minimum. Metadata is attached to your video to add sense and structure. This enables you to quickly retrieve the relevant images from hours of stored video. Metadata can also be used to deliver irrefutable forensic evidence or to optimize business processes based on people counting or crowd density information.
Calibration is quick and easy – just enter the height of the camera. The internal gyro/accelerometer sensor provides the rest of the information to precisely calibrate the video analytics.

Intelligent streaming reduces bandwidth and storage requirements
The low-noise image and the efficient H.265 compression technology provide clear images while reducing bandwidth and storage by up to 80% compared to standard H.264 cameras. With this new generation of cameras an extra level of intelligence is added with Intelligent Streaming. The camera provides the most usable image possible by cleverly optimizing the detail-to-bandwidth ratio. The smart encoder continuously scans the complete scene as well as regions of the scene and dynamically adjust compression based on relevant information like

movement. Together with Intelligent Dynamic Noise Reduction, which actively analyzes the contents of a scene and reduces noise artifacts accordingly, bitrates are reduced by up to 80%. Because noise is reduced at the source during image capture, the lower bitrate does not compromise image quality. This results in substantially lower storage costs and network strain and still retain a high image quality and smooth motion.

Bitrate optimized profile
The average typical optimized bitrate in kbits/s for various frame rates when in H.265 mode is shown in the table:

fps	1080p	720p
30	600	450
12	438	329
5	284	213
2	122	92

Multiple streams
The multi-streaming feature delivers various H.264 or H.265 streams together with an M-JPEG stream. These streams facilitate bandwidth-efficient viewing and recording as well as integration with third-party video management systems.
The camera can run multiple independent streams that allows to set a different resolution and frame rate on the first and second stream. The user can also choose to use a copy of the first stream.
The third stream uses the I-frames of the first stream for recording; the fourth stream shows a JPEG image at a maximum of 10 Mbit/s.

Two-way audio and audio alarm
Two-way audio allows the operator to communicate with visitors or intruders via an external audio line input and output. Audio detection can be used to generate an alarm if needed.
If required by local laws, the microphone can be permanently blocked via a secure license key.

Tamper and motion detection
A wide range of configuration options is available for alarms signaling camera tampering. A built-in algorithm for detecting movement in the video can also be used for alarm signaling.

Storage management
Recording management can be controlled by the Bosch Video Recording Manager
(Video Recording Manager) or the camera can use iSCSI targets directly without any recording software.

Edge recording
The MicroSD card slot supports up to 2 TB of storage capacity. A microSD card can be used for local alarm recording. Pre-alarm recording in RAM reduces recording bandwidth on the network, or — if microSD card recording is used — extends the effective life of the storage medium.

Cloud-based services
The camera supports time-based or alarm-based JPEG posting to four different accounts. These accounts can address FTP servers or cloud-based storage facilities (for example, Dropbox). Video clips or JPEG images can also be exported to these accounts.
Alarms can be set up to trigger an e-mail or SMS notification so you are always aware of abnormal events.

Easy installation
Power for the camera can be supplied via a Power-over-Ethernet compliant network cable connection. With this configuration, only a single cable connection is required to view, power, and control the camera. Using PoE makes installation easier and more cost-effective, as cameras do not require a local power source.
The camera can also be supplied with power from +12 VDC/24 VAC power supplies. To increase system reliability, the camera can be simultaneously connected to both PoE and +12 VDC/24 VAC supplies. Additionally, uninterruptible power supplies (UPS) can be used, which will allow continuous operation, even during a power failure.
For trouble-free network cabling, the camera supports Auto-MDIX which allows the use of straight or cross-over cables.

Automatic image rotation
The integrated gyro/accelerometer sensor automatically corrects the image orientation in steps of 90° if the camera is mounted at right angles or upside down. The sensor image can also be rotated manually through steps of 90°.
To efficiently capture details in long hallways without loss of resolution, mount the camera at right angles. The image is displayed upright at full resolution on your monitor.

True day/night switching
The camera incorporates mechanical filter technology for vivid daytime color and exceptional night-time imaging while maintaining sharp focus under all lighting conditions.

Hybrid mode
An analog video output enables the camera to operate in hybrid mode. This mode provides simultaneous high resolution HD video streaming and an analog video output via an SMB connector. The hybrid functionality offers an easy migration path from legacy CCTV to a modern IP-based system.

DORI coverage
DORI (Detect, Observe, Recognize, Identify) is a standard system (EN-62676-4) for defining the ability of a camera to distinguish persons or objects within a

covered area. The maximum distance at which a camera/lens combination can meet these criteria is shown below:

1080p camera with 3-9 mm lens

DORI	DORI definition	Distance 3 mm / 9 mm	Horizontal width
Detect	25 px/m 8 px/ft	32 m / 126 m 104 ft / 412 ft	77 m 252 ft
Observe	63 px/m 19 px/ft	13 m / 50 m 41 ft / 164 ft	30 m 100 ft
Recognize	125 px/m 38 px/ft	6 m / 25 m 21 ft / 82 ft	15 m 50 ft
Identify	250 px/m 76 px/ft	3 m / 13 m 10 ft / 41 ft	8 m 25 ft

Data security
Special measures have been put in place to ensure the highest level of security for device access and data transport. The three-level password protection with security recommendations allows users to customize device access. Web browser access can be protected using HTTPS and firmware updates can also be protected with authenticated secure uploads.
The on-board Trusted Platform Module (TPM) and Public Key Infrastructure (PKI) support, guarantee superior protection from malicious attacks. The 802.1x network authentication with EAP/TLS, supports TLS 1.2 with updated cipher suites including AES 256 encryption.
The advanced certificate handling offers:
- Self-signed unique certificates automatically created when required
- Client and server certificates for authentication
- Client certificates for proof of authenticity
- Certificates with encrypted private keys

Complete viewing software
There are many ways to access the camera's features: using a web browser, with the BVMS, with the free-of-charge Bosch Video Client or Video Security Client, with the video security mobile app, or via third-party software.

Video security app
The Bosch video security mobile app has been developed to enable Anywhere access to HD surveillance images allowing you to view live images from any location. The app is designed to give you complete control of all your cameras, from panning and tilting to zoom and focus functions. It's like taking your control room with you.

This app, together with the integrated Bosch Dynamic Transcoding on the DIVAR IP recorders, will allow you to fully utilize our dynamic transcoding features so you can play back images even over low-bandwidth connections.

System integration
The camera conforms to the ONVIF Profile S, ONVIF Profile G , and ONVIF Profile M specifications. This guarantees interoperability between network video products regardless of manufacturer.
Third-party integrators can easily access the internal feature set of the camera for integration into large projects. Visit the Bosch Integration Partner Program (IPP) website (ipp.boschsecurity.com) for more information.

Regulatory information

HD standards
Complies with the SMPTE 274M-2008 Standard in:
- Resolution: 1920x1080
- Scan: Progressive
- Color representation: complies with ITU-R BT.709
- Aspect ratio: 16:9
- Frame rate: 25 and 30 frames/s

Complies with the SMPTE 296M-2001 Standard in:
- Resolution: 1280x720
- Scan: Progressive
- Color representation: complies with ITU-R BT.709
- Aspect ratio: 16:9
- Frame rate: 25 and 30 frames/s

Standards	IEC 62471 (IR version)
	EN 60950-1
	UL 60950-1
	CAN/CSA-C22.2 NO. 60950-1-03
	EN 50130-4
	EN 50130-5, Class II (indoor in general, fixed equipment)
	FCC Part15 Subpart B, Class B
	EMC directive 2014/30/EU
	EN 55032 class B
	EN 55024
	AS/NZS CISPR 32 (equal to CISPR 32)
	ICES-003 Class B
	VCCI J55022 V2/V3

	EN 50121-4:2016
ONVIF compliance	EN 50132-5-2; IEC 62676-2-3
Product certifications	CE, FCC, UL, cUL, RCM, CB, VCCI, CMIM, EAC

Region	Regulatory compliance/quality marks	
Europe	CE	FLEXIDOME IP indoor 4000i/5000i | FLEXIDOME IP starlight 5000i (IR)
USA	UL	indoor 4/5000i

Installation/configuration notes

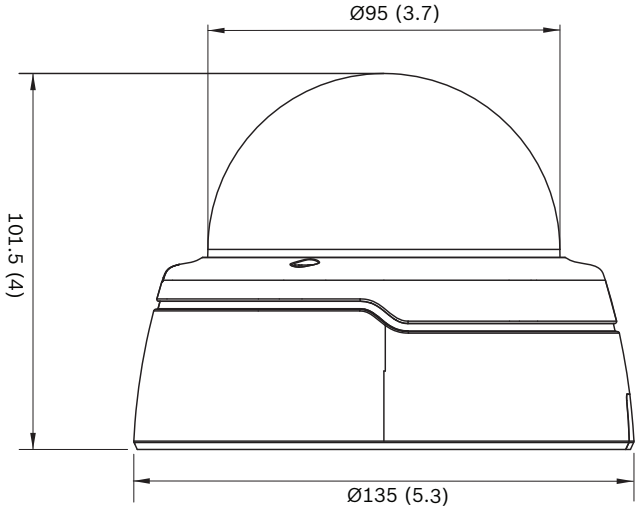

Technical specifications

Power	
Input voltage	+12 VDC ±5%, 24 VAC ±10% or Power-over-Ethernet (48 VDC nominal)
Power consumption (DC)	5.55 W max.
Power consumption (AC)	5 W max.
Power consumption (PoE)	6 W max.
PoE IEEE standard	IEEE 802.3af (802.3at Type 1) Power level: Class 3

Power (IR version)	
Input voltage	+12 VDC ±5%, 24 VAC ±10% or Power-over-Ethernet (48 VDC nominal)
Power consumption (DC)	9 W max.
Power consumption (AC)	7.4 W max.
Power consumption (PoE)	8.5 W max.
PoE IEEE standard	IEEE 802.3af (802.3at Type 1) Power level: Class 3

Platform	
Common product platform	CPP7.3

Sensor	
Sensor type	1/2.9-inch CMOS
Effective pixels	1920 (H) x 1080 (V); 2MP (approx.)

Video performance - Sensitivity	
Sensitivity - (3100K, reflectivity 89%, 1/25, F1.3, 30IRE)	
Color	0.12 lx
Mono	0.02 lx
With IR	0.0 lx

Video performance - Dynamic range	
Wide Dynamic Range	90 dB WDR
Measured according to IEC 62676 Part 5	85 dB WDR
IAE	+16 dB WDR

Video streaming	
Video compression	H.265; H.264; M- JPEG
Streaming	Multiple configurable streams in H.264 or H.265 and M-JPEG, configurable frame rate and bandwidth. Regions of Interest (ROI)
Camera processing latency	<120 ms (max. average at 1080p30)
GOP structure	IP, IBP, IBBP
Encoding interval	1 to 25 [30] fps

Video streaming	
Encoding regions	Up to 8 areas with encoder quality settings per area

Video resolution (H x V)	
1080p HD	1920 × 1080
Upright mode 1080p	1080 × 1920
1.3 MP (16:9)	1536 × 864
Upright mode 1.3 MP (16:9)	864 × 1536
720p	1280 × 720
Upright mode 720p	720 × 1280
480p SD	640 × 480
SD	768 × 432
D1	720 × 480

Video functions	
Day/Night	Color, Monochrome, Auto (adjustable switch points)
Adjustable picture settings	Contrast, Saturation, Brightness
White Balance	2500 to 10000K, 4 automatic modes (Basic, Standard, Sodium vapor, Dominant color), Manual mode and Hold mode
Shutter	Automatic Electronic Shutter (AES); Fixed (1/25[30] to 1/15000) selectable; Default shutter
Backlight compensation	On/off/Intelligent Auto Exposure (IAE)
Contrast enhancement	On/off
Signal-to-noise ratio (SNR)	>55 dB
Noise reduction	Intelligent Dynamic Noise Reduction with separate temporal and spatial adjustments
Sharpness	Sharpness enhancement level selectable
Intelligent defog	Intelligent Defog automatically adjusts parameters for best picture in foggy or misty scenes (switchable)
Privacy Masking	Eight independent areas, fully programmable

Video functions	
Video Analysis	Essential Video Analytics
Scene modes	Standard, Sodium Lighting, Traffic, Intelligent AE, Vibrant, Low bitrate, Sports & Gaming, Retail
Other functions	Image mirror, Image flip, Pixel counter, Video watermarking, Display stamping, Location
Camera rotation	Automatic detection with manual override (0° / 90°/ 180°/ 270°)

Video content analysis	
Analysis type	Essential Video Analytics
Features	Rule based alarms and tracking Line crossing Enter /leave field Follow route Loitering Idle / removed object People counting Crowd density estimation 3D tracking Audio detection (if microphone used)
Calibration / Geolocation	Automatic based on gyro / accelerometer data and camera height
Tamper detection	Maskable
Audio detection	Detection of audio to generate an alarm

Night vision (IR version only)	
Distance	30 m (98 ft)
LED	10 LED high efficiency array, 850 nm
IR intensity	Adjustable

Optical	
Lens type	3 to 9 mm Automatic Varifocal (AVF) lens, IR corrected DC Iris F1.3 - 360
Lens mount	Board mounted
Adjustment	Motorized zoom/focus
Iris control	Automatic iris control

Optical	
Day/Night	Switched mechanical IR filter
Horizontal field of view	37° - 106°
Vertical field of view	21° - 55°

Input/output	
Analog video out	SMB connector, CVBS (PAL/NTSC), 1 Vpp, 75 Ohm, approx. 500 TVL
Audio line in	0.707 Vrms max, 10 kOhm typical, jack connector
Audio line out	0.707 Vrms at 16 Ohm typical, jack connector
Audio input	Built-in microphone (can be permanently disabled)
Alarm input	1 input
Alarm input activation	Short or DC 5V activation
Alarm output	1 output
Alarm output voltage	30 VDC, max. load 0.5 A
Ethernet	RJ45

Audio streaming	
Standard	G.711, 8 kHz sampling rate L16, 16 kHz sampling rate AAC-LC, 48 kbps at 16 kHz sampling rate AAC-LC, 80 kbps at 16 kHz sampling rate
Signal-to-Noise Ratio	>50 dB
Audio Streaming	Full-duplex / half duplex

Local storage	
Internal RAM	5 s pre-alarm recording
Memory card slot	Supports up to 32 GB microSDHC / 2 TB microSDXC card. (A memory card of Class 6 or higher is recommended for HD recording)
Recording	Continuous recording, ring recording. alarm/ events/schedule recording

Mechanical	
3-axis adjustment (pan/ tilt/rotation)	350º / 130º / 350º
Dimensions (Ø x H)	135 x 102 mm (5.32 x 4 in)

Mechanical	
Weight (approx.)	450 g (0.99 lb)
Color	RAL 9003, RAL 9017
Dome bubble	Polycarbonate, clear with anti-scratch coating

Environmental	
Operating temperature (continuous)	-20 ºC to +50 ºC (-4 ºF to +122 ºF)
Storage temperature	-30 ºC to +70 ºC (-22 ºF to +158 ºF)
Humidity	5% to 93% relative humidity (non condensing)

Network	
Protocols	IPv4, IPv6, UDP, TCP, HTTP, HTTPS, RTP/RTCP, IGMP V2/V3, ICMP, ICMPv6, RTSP, FTP, ARP, DHCP, APIPA (Auto-IP, link local address), NTP (SNTP), SNMP (V1, V3, MIB-II), 802.1x, DNS, DNSv6, DDNS (DynDNS.org, selfHOST.de, no-ip.com), SMTP, iSCSI, UPnP (SSDP), DiffServ (QoS), LLDP, SOAP, Dropbox™, CHAP, digest authentication
Encryption	TLS1.0/1.2, AES128, AES256
Ethernet	10/100 Base-T, auto-sensing, half/full duplex
Connectivity	Auto-MDIX
Interoperability	ONVIF Profile S, ONVIF Profile G, ONVIF Profile M

Ordering information

NDI-4502-A Fixed dome 2MP 3-9mm auto
Professional IP dome camera for indoor HD surveillance with H.265 and Essential Video Analytics.
NDAA compliant
Order number **NDI-4502-A | F.01U.379.284 F.01U.316.645 F.01U.379.276 F.01U.364.637**

NDI-4502-AL Fixed dome 2MP 3-9mm auto
Professional IP dome camera for indoor HD surveillance with H.265, Essential Video Analytics and integrated Infrared.
NDAA compliant
Order number **NDI-4502-AL | F.01U.379.285 F.01U.316.646 F.01U.364.638 F.01U.379.277**

Accessories

NDA-5031-PIP Pendant interface plate NDI-4/5000
Pendant interface plate for indoor FLEXIDOME IP 4000i / 5000i.
Order number **NDA-5031-PIP | F.01U.329.708**

BUB-CLR-FDI Bubble, clear, indoor
Clear polycarbonate bubble for dome camera
Indoor
Order number **BUB-CLR-FDI | F.01U.319.963**

BUB-TIN-FDI Bubble, tinted, indoor
Tinted polycarbonate bubble for dome camera.
Indoor
Order number **BUB-TIN-FDI | F.01U.319.961**

NDA-U-WMT Pendant wall mount
Universal wall mount for dome cameras, white
Order number **NDA-U-WMT | F.01U.324.939**

NDA-U-PMT Pendant pipe mount, 12" (31cm)
Universal pipe mount for dome cameras, 31 cm, white
Order number **NDA-U-PMT | F.01U.324.940**

NDA-FMT-DOME Inceiling flush mount for dome camera
In-ceiling flush mounting kit for dome cameras (Ø157 mm)
Order number **NDA-FMT-DOME | F.01U.303.768**

NDA-ADT4S-MINDOME Surface mount box for dome camera
Surface mount box (Ø145 mm / Ø5.71 in) for dome cameras (for indoor camera variant, use together with NDA-ADTVEZ-DOME).
Order number **NDA-ADT4S-MINDOME | F.01U.285.200**

NDA-ADTVEZ-DOME Adapter bracket for dome
Adapter bracket for indoor use (for indoor camera variant, use together with NDA-ADT4S-MINDOME).
Order number **NDA-ADTVEZ-DOME | F.01U.303.769**

NBN-MCSMB-03M Cable, SMB to BNC, camera-cable, 0.3m
0.3 m (1 ft) analog cable, SMB (female) to BNC (female) to connect camera to coaxial cable
Order number **NBN-MCSMB-03M | F.01U.291.564**

NBN-MCSMB-30M Cable, SMB to BNC, camera-monitor/DVR
3 m (9 ft) analog cable, SMB (female) to BNC (male) to connect camera to monitor or DVR
Order number **NBN-MCSMB-30M | F.01U.291.565**

NDA-U-PMAS Pole mount adapter small
Pole mount adapter small
Universal pole mount adapter, white; small.
Order number **NDA-U-PMAS | F.01U.324.943**

NDA-U-PMTE Pendant pipe extension, 20" (50cm)
Extension for universal pipe mount, 50 cm, white
Order number **NDA-U-PMTE | F.01U.324.941**

NDA-U-PSMB Pendant wall/ceiling mount SMB
Surface mount box (SMB) for wall mount or pipe mount.
Order number **NDA-U-PSMB | F.01U.324.942**

UPA-1220-60 Power supply, 120VAC 60Hz,12VDC 1A out
Power supply for camera. 100-240 VAC, 50/60 Hz In; 12 VDC, 1 A Out; regulated.
Input connector: 2-prong, North American standard (non-polarized).
Order number **UPA-1220-60 | F.01U.076.155**

NPD-5001-POE Midspan, 15W, single port, AC in
Power-over-Ethernet midspan injector for use with PoE enabled cameras; 15.4 W, 1-port
Weight: 200 g (0.44 lb)
Order number **NPD-5001-POE | F.01U.305.288**

NPD-5004-POE Midspan, 4 port x 15W, AC in
Power-over-Ethernet midspan injector for use with PoE enabled cameras; 15.4 W, 4-ports
Weight: 620 g (1.4 lb)
Order number **NPD-5004-POE | F.01U.305.289**

NDA-U-CMT Corner mount adapter
Universal corner mount, white
Order number **NDA-U-CMT | F.01U.324.946**

NDA-U-PMAL Pole mount adapter large
Universal pole mount adapter, white; large
Order number **NDA-U-PMAL | F.01U.324.944**

VDA-PMT-AODOME Pipe mount for AUTODOME, outdoor
Sturdy outdoor pipe mount bracket for dome cameras (Ø166 mm)
Order number **VDA-PMT-AODOME | F.01U.268.901 F.01U.313.786**

VEZ-A2-WW Wall mount for PTZ dome, white
Wall mount (Ø145/149 mm) for dome cameras (use together with appropriate dome adapter bracket); white
Order number **VEZ-A2-WW | F.01U.100.210**

NDA-LWMT-DOME Wall mount, L-shaped, for dome camera
Sturdy wall L-shaped bracket for dome cameras
Order number **NDA-LWMT-DOME | F.01U.303.767**

Represented by:

Europe, Middle East, Africa:
Bosch Security Systems B.V.
P.O. Box 80002
5600 JB Eindhoven, The Netherlands
Phone: + 31 40 2577 284
www.boschsecurity.com/xc/en/contact/
www.boschsecurity.com

Germany:
Bosch Sicherheitssysteme GmbH
Robert-Bosch-Ring 5
85630 Grasbrunn
Tel.: +49 (0)89 6290 0
Fax:+49 (0)89 6290 1020
de.securitysystems@bosch.com
www.boschsecurity.com

North America:
Bosch Security Systems, LLC
130 Perinton Parkway
Fairport, New York, 14450, USA
Phone: +1 800 289 0096
Fax: +1 585 223 9180
onlinehelp@us.bosch.com
www.boschsecurity.com

Asia-Pacific:
Robert Bosch (SEA) Pte Ltd, Security Systems
11 Bishan Street 21
Singapore 573943
Phone: +65 6571 2808
Fax: +65 6571 2699
www.boschsecurity.com/xc/en/contact/
www.boschsecurity.com

© Bosch Security Systems 2022