Product data sheet

DMN700R

Pulsador convencional para montaje empotrado con resistencia de 560. Rojo.

General

Installation efficiency, flexibility and full compliance with the latest standards are at the heart of the new MCP indoor call point range.

Installation

Installation time and ultimately cost, are of paramount importance. The MCP range directly reflects this need by providing a unique ‘plug and play’ concept designed specifically to reduce installation time. All new MCP products utilize a special terminal block, where all initial installation cabling is terminated. This terminal block is then simply connected to the back of the MCP. Simple, but effective, with no re-termination required and no time wasted.

Options and approvals

Through new standards and legislation, both break glass and re-settable operating elements may now be used. To provide the greatest ‘flex-ability’, the new MCP range can be configured as either a break glass or re-settable unit by simply changing from one element to another. No other additional parts or alternative products are required.

Full compliance with the latest standards is essential and the new MCP indoor call point range is fully approved to the latest EN54-11 standard

Details

- Enhanced aesthetics
- ‘Plug & Play’ installation concept
- Surface mount option available
- Protection hinged cover with anti-tamper facility available
- Built in resistor or potential free, change-over contacts provides backward compatibility options to any conventional systems
- Key test facility avoids breaking the glass during testing
- Resettable element available as alternative for the frangible (glass) element
- Easy to replace glass
- High quality micro switch ensures maximum reliability
- Fully approved to the latest standards

DMN700R

Pulsador convencional para montaje empotrado con resistencia de 560. Rojo.

Technical specifications

General

Indicación de estado	Flag
Compatibilidad	Conventional zones

Eléctrico

Voltaje de funcionamiento	30 VDC (Max)
Especificaciones del cable	0.5 - 2.5 mm²
No. de nucleos de cable	2
Terminales	3

Detección

Principio de detección	Switch

Físico

Dimensiones físicas	89 x 93 x 27.5 mm
Peso neto	130 g
Color	Rojo (RAL 3001)
Tipo de Montaje	Montaje empotrado
Entradas de cable	1 (Rear)
Material	PC/ABS
Marcado funcional	House on Fire

Medioambiental

Antivandálico	No
Temperatura de funcionamiento	-10 to +55°C
Temperatura de almacenamiento	-10 to +55°C
Humedad relativa	93± 3% non-condensing
Entorno	Interior
Clasificación IP	IP24D

Estándares y regulaciones

Cumplimiento	CE, REACH, RoHS 2
Certificación	EN54-11
Normativas	EN54-11

Detection

Max. contact rating (resistive load)	2A @ 30 VDC

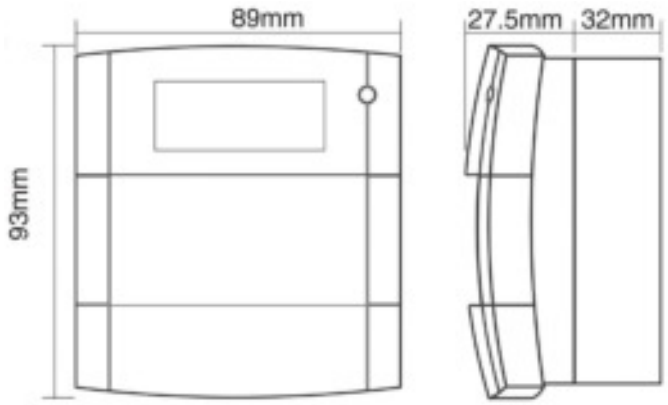

Como empresa innovadora, Carrier Fire & Security se reserva el derecho de modificar las especificaciones de los productos sin previo aviso. Para conocer las últimas especificaciones de los productos, visite la Web de es.firesecurityproducts.com o póngase en contacto con su comercial.

Last updated on 28 January 2022 - 12:14